Introduction to WCDMA Physical Layer

Reference:

WCDMA for **UMTS**

Radio Access For Third Generation Mobile Communication

Edited by Harri Holma and Antti Toskala

報 告 人：林文祈

日 期：2001/05/02

Outline

- Transport Channels and their mapping to physical channels
  - Dedicated Transport Channel
  - Common Transport Channels
  - Mapping to physical channels
- Spreading and Modulation
  - Channelization Codes
  - Spreading and Modulation
- User Data Transmission

Transport Channels and their mapping to physical channels

- Dedicated Transport Channel
  - The only Dedicated Transport Channel is Dedicated Channel (DCH)
  - Characterised by features of fast power control, fast data rate change on a frame-by-frame basis, soft handover and possible adaptive antenna

Transport Channels and their mapping to physical channels

- Common Transport Channel
  - **Broadcast Channel**
    - → Downlink Channel
    - → Transmitted with high power and low fixed information rate
  - **Forward Access Channel**
    - → Downlink Channel
    - → Carry control information to terminals known in the given cell
    - → Must transmit in low bit rate

Transport Channels and their mapping to physical channels

— **Paging Channel**

→ Downlink Channel

→ Carries data relevant to the paging procedure

→ The less the terminal has to listen, the longer the battery's life in the stand by mode

— **Random Access Channel**

→ Uplink Channel

→ Carries information of requesting to set up a connection

→ Must transmit in low bit rate

Transport Channels and their mapping to physical channels

— **Uplink Common Packet Channel**

→ Uplink Channel

→ The pair is FACH in the downlink

→ Fast power control

— **Downlink Shared Channel**

→ Downlink Channel

→ Carries dedicated user data and/or control

→ Can be shared by several users

→ Use fast power control and variable bit rate on frame-by-frame basis

Transport Channels and their mapping to physical channels

- Mapping to physical channels
  - Each transport channel is accompanied by the Transport Format Indicator (TFI)
  - The physical layer combines the TFI to TFCI in the physical control channel, the exception to this is the use of Blind Transport Format Detection (BTFD)
  - For every 10ms decode the TFCI

Transport Channels and their mapping to physical channels

- Mapping to physical channels

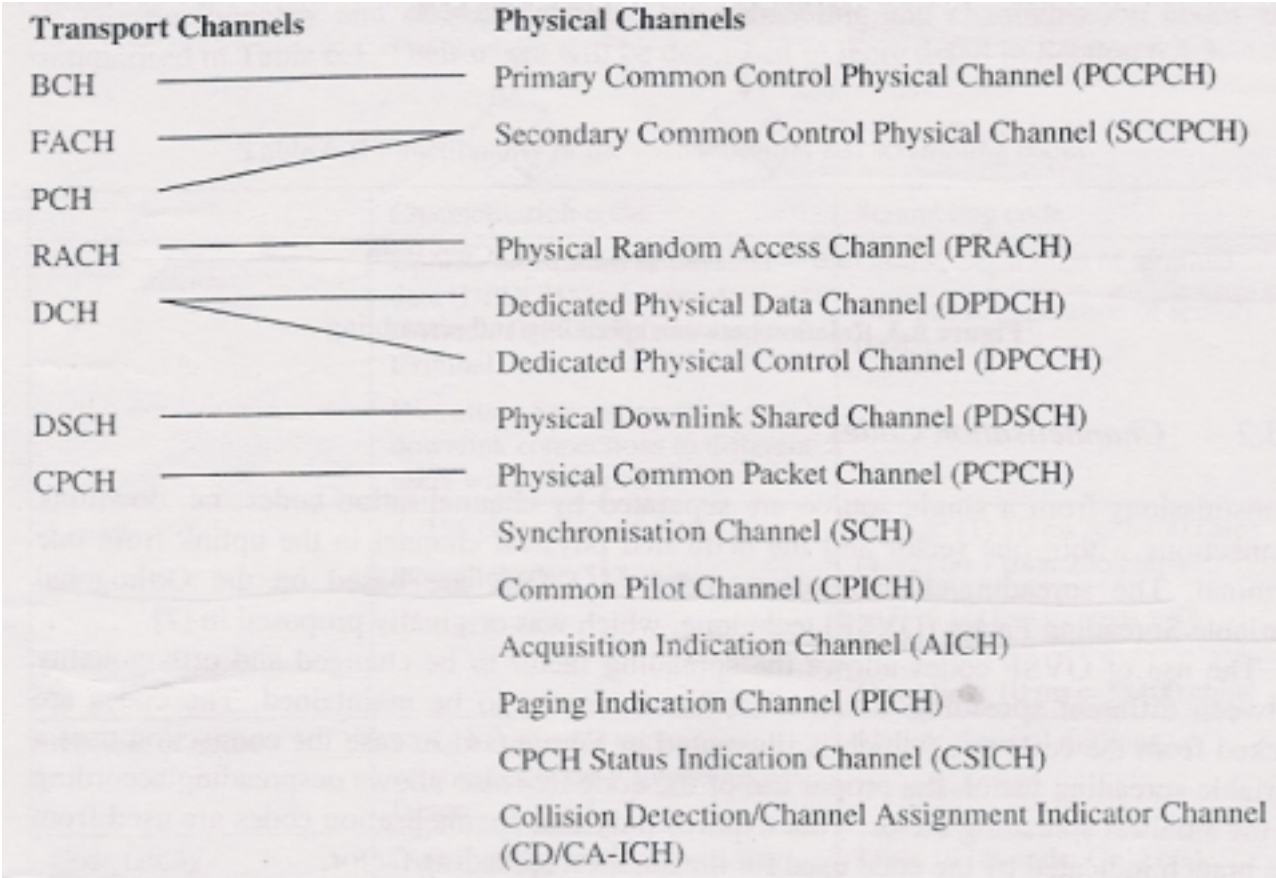

Figure 6.2. Transport-channel to physical-channel mapping

Spreading and Modulation

- Channelization Codes
  - Use the Orthogonal Variable Spreading Factor (OVSF) technique

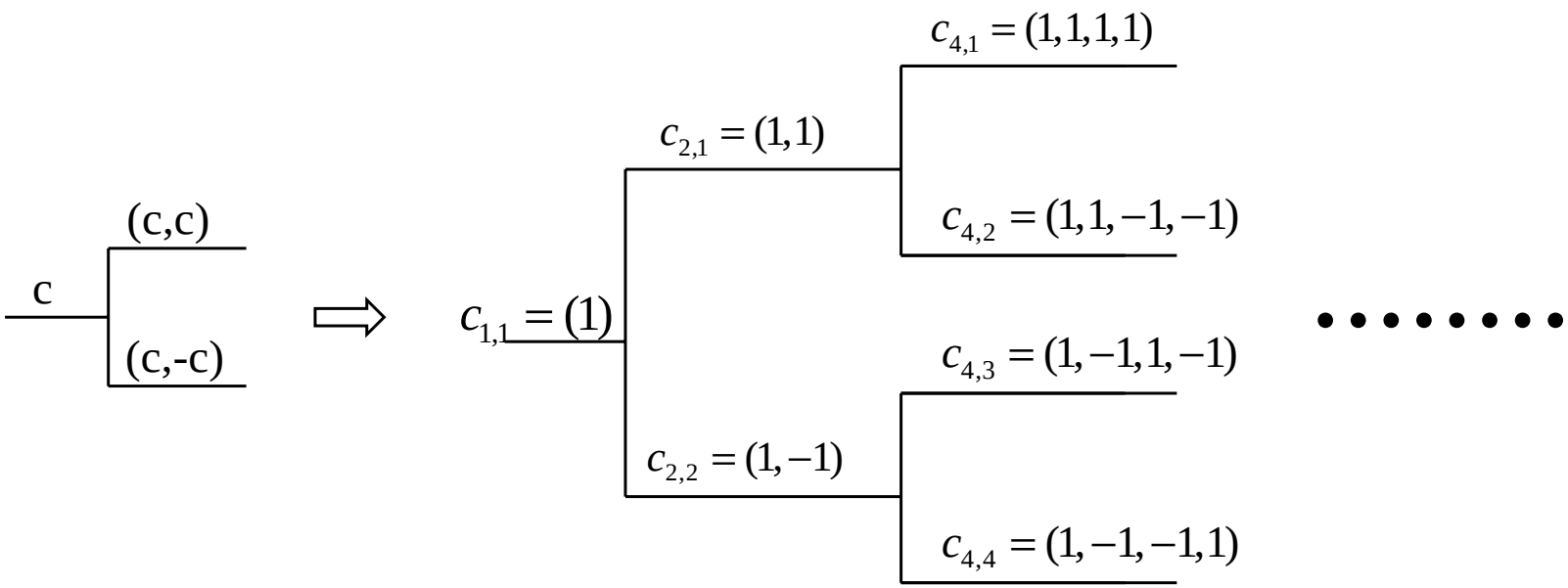

Spreading and Modulation

Table 6.1. Functionality of the channelisation and scrambling codes

	Channelisation code	Scrambling code
Usage	Uplink: Separation of physical data (DPDCH) and control channels (DPCCH) from same terminal Downlink: Separation of downlink connections to different users within one cell	Uplink: Separation of terminal Downlink: Separation of sectors (cells)
Length	4–256 chips (1.0–66.7 μs) Downlink also 512 chips	Uplink: (1) 10 ms = 38400 chips or (2) 66.7 μs = 256 chips Option (2) can be used with advanced base station receivers Downlink: 10 ms = 38400 chips
Number of codes	Number of codes under one scrambling code = spreading factor	Uplink: Several millions Downlink: 512
Code family	Orthogonal Variable Spreading Factor	Long 10 ms code: Gold code Short code: Extended S(2) code family
Spreading	Yes, increases transmission bandwidth	No, does not affect transmission bandwidth

Spreading and Modulation

- Spreading and Modulation

  — Uplink Moculation

  → Two basic consideration : the terminal amplifier efficiency and the audible interference minimization

  → Uplink DPDCH : discontinuous
  Uplink DPCCH : continuous
  ⇨ Discontinuous uplink transmission causes the audible interference

  → Therefore, not time multiplexing, but I,Q channel multiplexing

  → Low peak to average ratio will result in good amplifier efficiency

  ⇨ G (the relative strengths of the DPDCH and DPCCH) is used

Spreading and Modulation

— Uplink Moculation

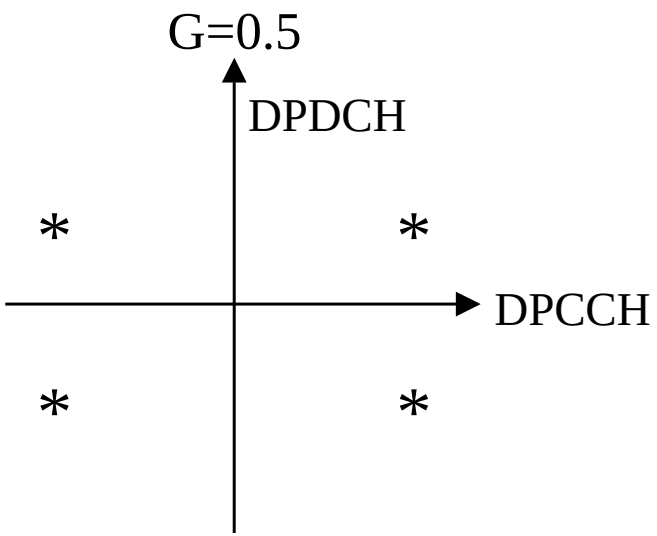

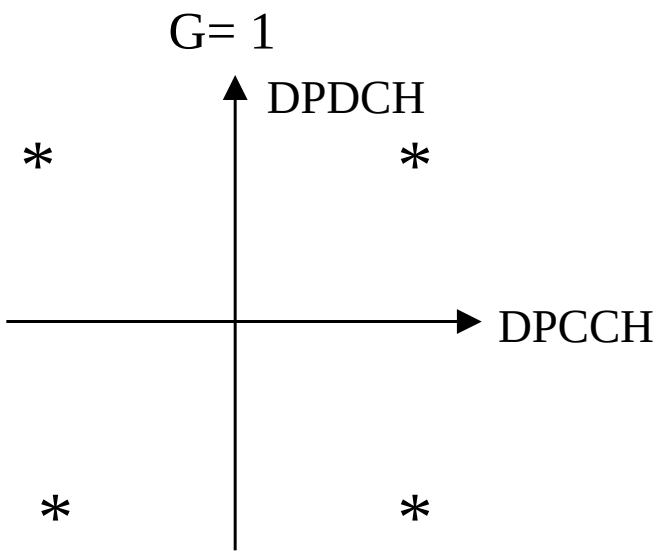

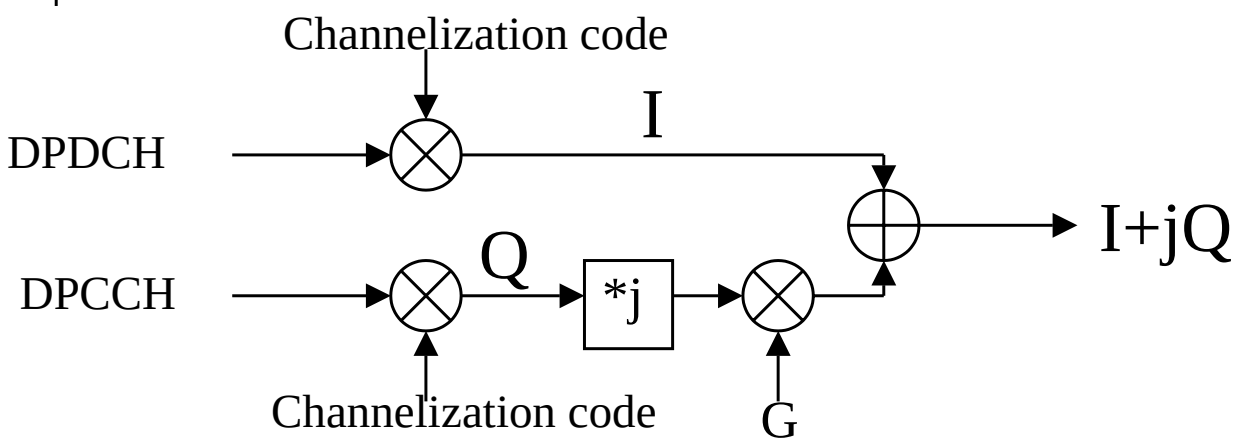

Spreading and Modulation

— Downlink Moculation

→ Time multiplexing, continuous transmission

— Spreading

→ Uplink : DPCCH use fixed SF, DPDCH may vary SF on a frame by frame basis

→ Downlink : Typically, one cell or sector use a scrambling code, one code tree is shared by common and dedicated channels. Downlink Dedicated Channels have fixed SF. When multicode transmission for a single user, the parallel code channels have different channelization codes and SF are the same

Spreading and Modulation

— Uplink Scrambling Codes

→ To separate from different sources

→ Long Code : Gold code, 31-degree code generator, only 10 ms frame length equals to 38400chips are used

⇨ If the BS use a Rake receiver

→ Short Code : 256 chips

⇨ If multiuser detector and interference cancellation receivers are used in BS

— Downlink Scrambling Codes

→ Use Long Code

→ Typically one scrambling code is used per sector in the BS

Spreading and Modulation

— Spreading and Modulation on Uplink Common Channels

→ RACH with preamble is BPSK valued modulation and only 4096 chips are needed from the beginning of the code period

→ For PAR reduction

$$b(k) = a(k)e^{j(\pi/4+\pi/2)} \qquad k = 0,1,2.....4095$$

a(k) is the binary preamble and b(k) is the resulting complex-valued preamble with limited 90° phase transition

→ CPCH spreading and modulation is identical to RACH

Spreading and Modulation

— Synchronization Channel Spreading and Modulation

→ Primary and Secondary SCH

→ Primary SCH contains a code word with 256 chips identical in every cell

→ Secondary SCH code word varies from one BS to another of total 64 code words

User Data Transmission

— Uplink Dedicated Channel

→ I,Q/code multiplexing

→ DPCCH with a fixed SF of 256 and DPDCH with SF from 4 to 256

→ DPDCH data rate may vary on a frame-by-frame basis and data rate information is informed in TFCI in DPCCH

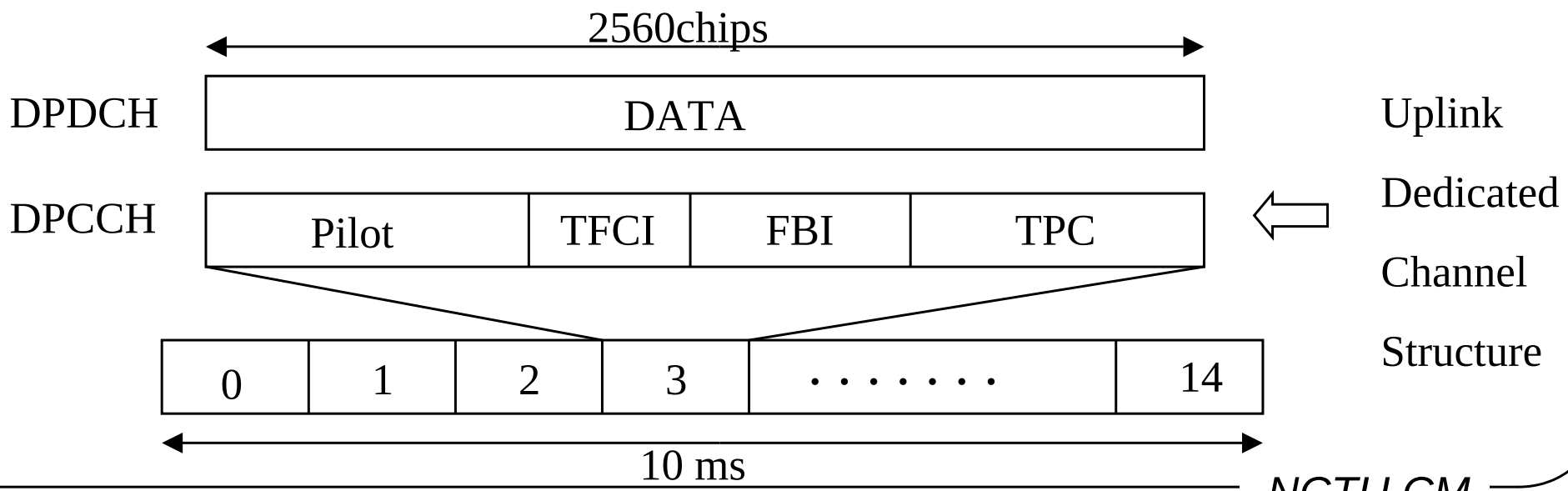

User Data Transmission

— Uplink Dedicated Channel

→ Total of 6 slot structure for uplink DPCCH

⇨ 0,1,2 bits for FBI and with or without TFCI

DPDCH SF	DPDCH Channel bit rate (kbps)	Max data rate with ½ rate coding
256	15	7.5 kpbs
128	30	15 kpbs
64	60	30 kpbs
32	120	60 kpbs
16	240	120 kpbs
8	480	240 kpbs
4	960	480 kpbs
4, with 6 parallel codes	5740	2.3 Mbps

User Data Transmission

— Uplink Dedicated Channel

When receiver receives the transmission from a terminal:

→ Receiver receives DPCCH and despreads it and buffer DPDCH

→ Estimate the channel from the Pilot on DPCCH

→ Decode TPC bit in each slot to adjust downlink power

→ Decode FBI bits on fourth slot to adjust diversity

→ Every 10 ms decode the TFCI

→ For TTI of 10,20,40 or 80 ms, decode DPDCH

User Data Transmission

— Uplink Multiplexing and Channel Coding chain

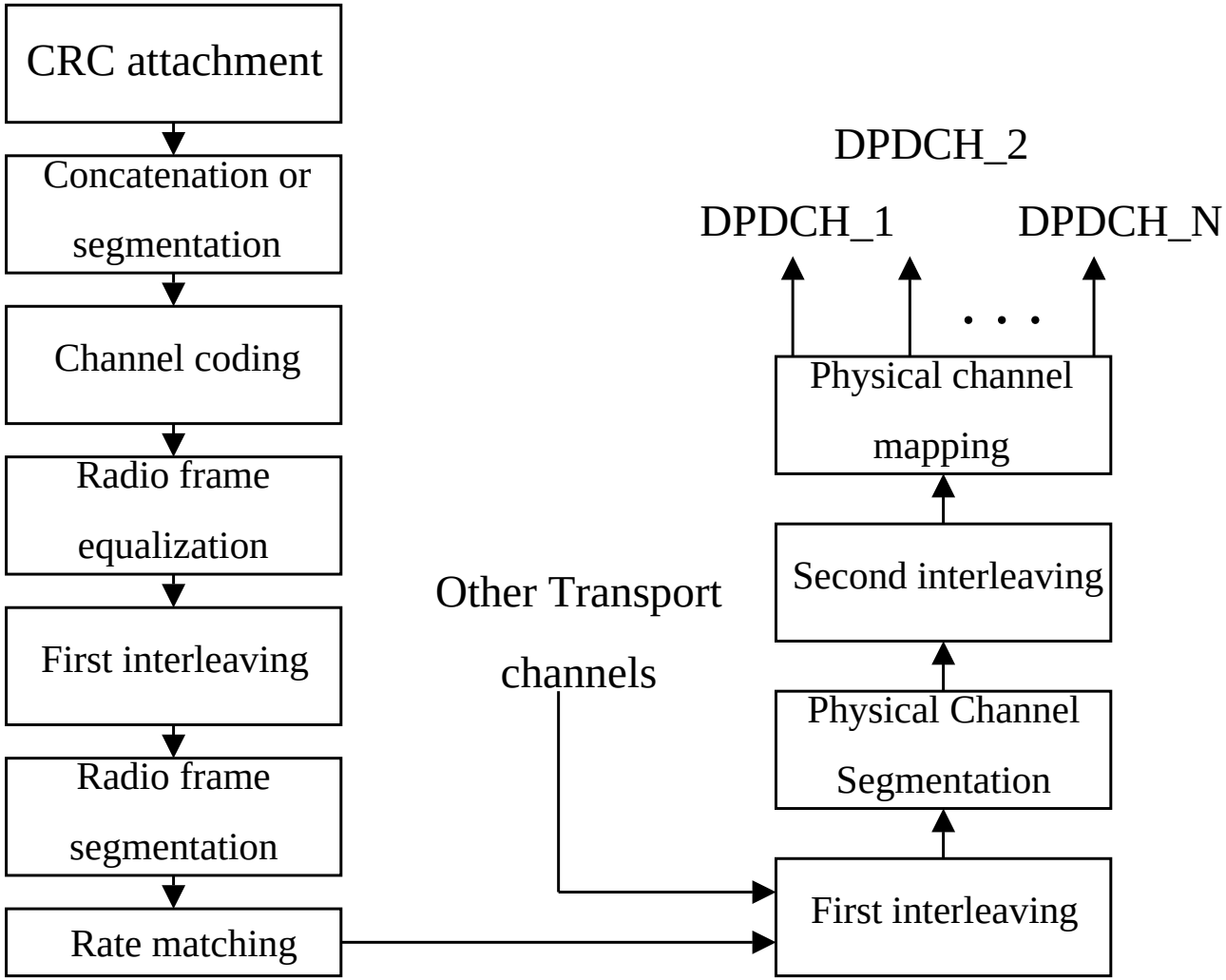

User Data Transmission

— Uplink Multiplexing and Channel coding chain

→ CRC attachment

⇨ When receiving a transport block, operate the CRC attachment

CRC length: 0,8,12,16,24 bits

→ Transport block concatenation/code block segmentation

⇨ According to the channel coding used, choose concatenation or segmentation

→ Radio frame equalization

⇨ To ensure data can be divided into equal-sized blocks

⇨ Padding bits until in equal-sized blocks per frame

User Data Transmission

— Uplink Multiplexing and Channel coding chain

→ First interleaving

- Interleaving period equals to TTI (Transmission Time Interval) length
- Inter-frame interleaving

→ Radio frame segmentation

- 10 ms segmentation

→ Rate matching

- Match the number of bits to be available on a frame
- Repetition or puncture

User Data Transmission

— Uplink Multiplexing and Channel coding chain

→ Second interleaving

⇨ 10 ms interleaving period. Intra-frame interleaving.

⇨ 30 columns, inter-column changed operation

Final

Thank you for your attention !